VIDIMA BALANCE

VIDIMA

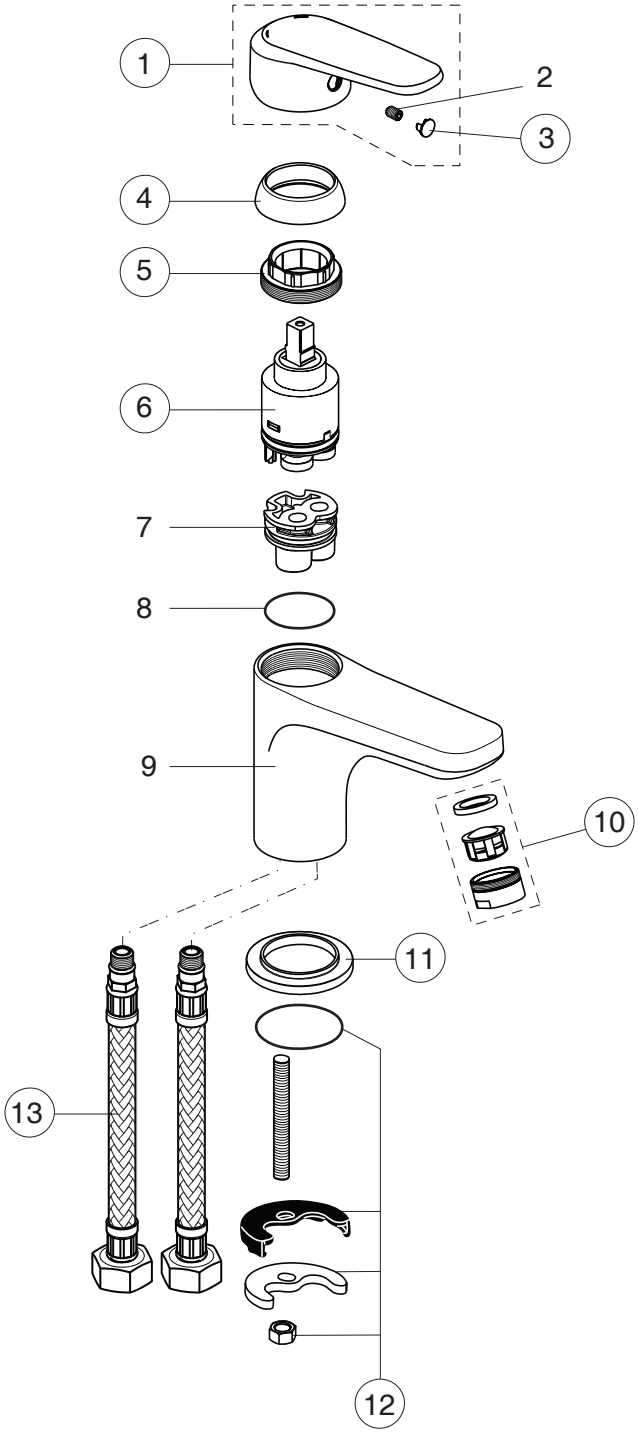

BA264AA

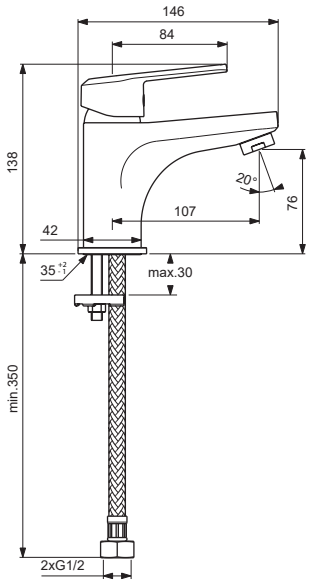

Pos.	Signify	Spare parts-Nr.	Quantity	Pos.	Signify	Spare parts-Nr.	Quantity
1	Lever,w/logo-compl.	B961277AA	1 Pcs.				
2	Screw M5x8		1 Pcs.				
3	Cap decorative	B960473AA	1 Pcs.				
4	Cap	B964697AA	1 Pcs.				
5	Screw M38x1.5	B961474NU	1 Pcs.				
6	Cartridge Ø35mm	B961479NU	1 Pcs.				
7	Manifold		1 Pcs.				
8	O-Ring Ø27.6x2.4		1 Pcs.				
9	Body basin		1 Pcs.				
10	Perlator M24x1-A	B960411AA	1 Pcs.				
11	Rosette decorative	B960712AA	1 Pcs.				
12	Connecting set	B964702NU	1 Pcs.				
13	Flex hose G1/2 M10x1/8x12/L400	B960413NU	1 Pcs.				